2-Way Temperature Sensing Valves

Models 2230D & 4430B

Model 2230 (Brass)

Model 4430 (Stainless steel)

Typical applications

- Lube oil
- Jacket water
- Discharge gases
- Bearings or packing

Key benefits

- Compact, rugged design
- Factory set and field adjustable
- Compatible in hydraulic or gas systems
- Few moving parts
- Compatible with complete AMOT shutdown systems
- No electricity required; failsafe
- No wires to break or corrode

Key features

- Viton seals standard
- Brass (2230) or Stainless Steel (4430) construction
- Temperature setting available from 30°C - 118°C (95°F - 245°F) standard or 129°C (265°F) high temperature
- Maximum pressure at the IN Port is 8.6 bar (125 psi)
- Maximum internal pressure on the temperature sensing element is 55.1 bar (800 psi)

Accreditations available

- PED — Suitable for Group 1 & 2 liquids (Ensure materials are compatible)
- ATEX — Ex II 2G TX X
- CE — 2230C/4430B Complies with all relevant EU directives

www.amot.com

Contents

2-Way Temp. Sensing Valves - Models 2230D/4430B

Overview

Model 2230/4430 is a normally-closed, 2-way valve which is opened by increasing temperature of engine cooling water, lubricating oil, high pressure gas or other fluids. The 2230/4430 can also be used to sensing high bearing or packing temperatures.

Opening of the valve vents control pressure from an AMOT Mater Safety Control such as Model 2800 or 4261, and protects the engine, compressor, pump, gear case, and industrial machinery from over-temperature.

Operation

Model 2230/4430 operation is simple and straight forward. As the temperature of the sensed fluid increases, wax enclosed in the valve's temperature sensing element expands against a push rod, which in turn unseats a valve allowing flow to travel from the valve's IN port and out the valve's OUT port. For visual indication that the temperature valve has tripped, use AMOT Model 4054 Trip Indicator.

Model 2230/4430 Temperature Valves are set at the factory, and the trip temperature is stamped on the valve body. The valve will start to bleed control pressure at 2°F to 4°F below its calibrated setting. Do not operate 2230/4430 beyond the valve's maximum continuous operating temperature. Both models are field service/adjustable. See 'Adjustment' below.

Adjustment

Refer to cut-away view to the right. To adjust the temperature setting of the 2230/4430, place a screwdriver through the IN port and in the slot of the adjusting screw ⑩. To RAISE the temperature setting turn the screw counter-clockwise, to LOWER the setting turn the screw clockwise. One turn equals about 10°F. When changing the tripping temperature be sure that the valve is not adjusted beyond the range limit.

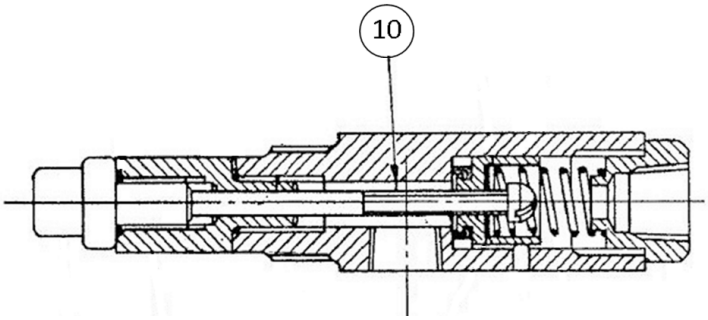

Installation

Before installing the Model 4430 it is advisable to run a $^{22}/_{32}$" diameter tap drill through the pipe fitting in which the unit will be placed. Some commercial fittings are not tapped deep enough and the threads may damage the valve's temperature element cup.

Apply a quality thread sealant such as Loctite™ Pipe Sealant to pipe thread connections. Avoid introducing the sealant or other contaminants into the system.

On a system using lubricating oil for control pressure, the vent port is connected to the engine oil sump. If natural gas is used, the vent port is connected to the system vent.

No vent connection is required where air is the control medium, but the port should be protected from contamination by an AMOT 4125 vent closure or a tubing elbow turned downward.

Typical installation diagram

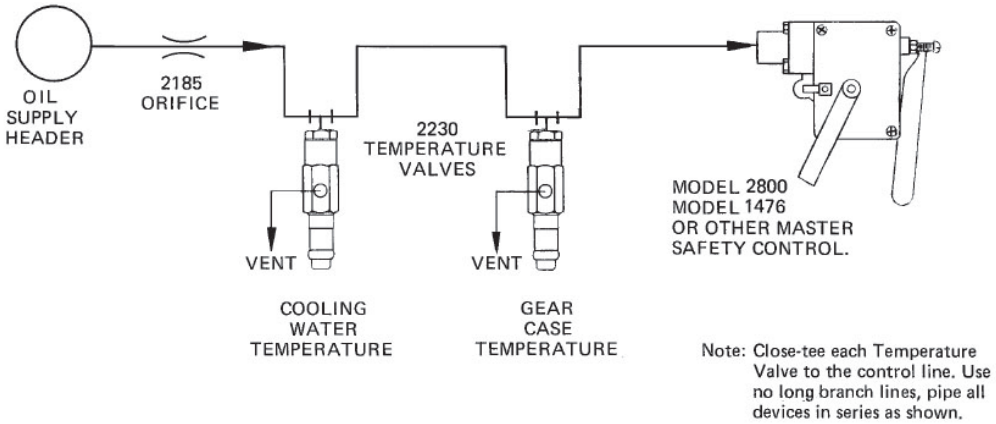

Stainless Steel Wells

Two types of stainless steel wells may be used with Model 4430 Temperature Valves.

Well	Connection	Maximum operational pressure
2766L	1" NPT	10,000 psi
3802L	¾" NPT	5,000 psi

To obtain working pressure, factors of safety should be applied as required by appropriate codes or regulations. In certain adverse conditions, a corrosion or erosion allowance should also be made.

Optional Visual Trip Indicators

A typical installation for lube oil pressured system.

It is also suitable for air or gas systems when not vented back to the oil sump.

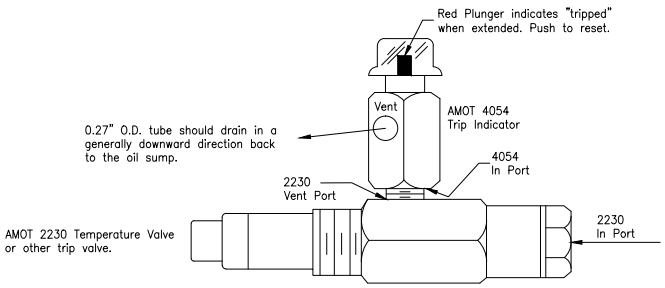

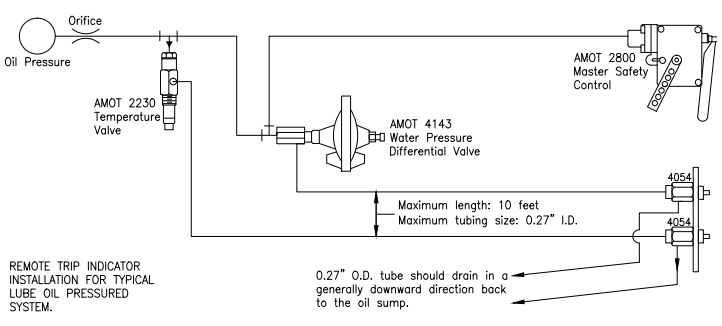

Valve Characteristics

Temperature element characteristics

Code	Temperature element extension		Installed depth of wells			
	Installed depth "L"		¾" 3802L Well "M"		1" 2766L Well "N"	
	Inch	mm	Inch	mm	Inch	mm
0*	1 3/8	34.9	-	-	-	-
1	2 3/16	55.6	1 11/16	42.9	2	50.8
2	2 1/2	63.5	1 15/16	49.2	2 1/4	57.2
3	3	73.2	2 7/16	61.9	2 3/4	69.9
4	3 1/2	88.9	2 15/16	74.6	3 1/4	82.6
5	4	101.6	3 7/16	87.3	3 3/4	95.3
6	4 1/2	114.3	3 15/16	100	4 1/4	107.6
7	5	127	4 7/16	112.7	4 3/4	120.7

NOTES:

* No extension, and no well available.

Temperature ranges

Code		Temp. range without a well (add 10°F if in a well)		Maximum cont. allowable temp.	
Standard element	Plated element	°F	°C	°F	°C
A	K	60 - 95	15 - 35	120	49
B	M	96 - 130	36 - 54	155	68
C	N	131 - 160	55 - 71	180	85
D	P	161 - 180	72 - 82	215	102
E	R	181 - 210	83 - 99	230	110
F	S	215 - 225	101 - 107	245	118
G	T	226 - 245	108 - 118	255	124
H	W	265	129	275	135
J	X	246 - 255	119 - 124	275	135

How to Order

Use the table below to select the unique specification of your Model 2230/4430 2-Way Temperature Sensing Valve.

Example	2230D	1	2	0	E	N	210F		**Code description**	**Comments**
									Basic model (A)	
Basic model (A)	2230C								Brass	UK ONLY
	2230D								Brass	USA ONLY
	4430B								Stainless steel	
									Finish and thread (B)	
Finish and thread (B)		1							Standard, NPT	
		2							Standard, BSP (TR)	
		3							Plated, NPT	
		4							Plated, BSP (TR)	
									Seal material (C)	
Seal material (C)			2						Viton	
									Temperature element extension/installed depth of wells (D)	
Temperature element extension/installed depth of wells (D)				*					For temperature element extensions/installed depths of wells available, refer to the temperature element characteristics table on page 4.	
									Temperature Range (E)	
Temperature range (E)					**				For temperature ranges available, refer to the temperature ranges table on page 4.	
									Thermal well code (F)	
Thermal well code (F)						N			Not fitted	
						V			Calibrated in a well	Well not fitted
						1			¾” NPT	
						2			1” NPT	
									Temperature setting (G)	
Temperature setting (G)							210F		(temperature) in °F or °C	
									Customer special requirements (H)	
Customer special requirements (H)								-AA	Standard	May be omitted
								-***	Customer special code	

2-Way Temp. Sensing Valves - Models 2230D/4430B

Specification

	2230C/2230D		4430B	
	Metric units	**English units**	**Metric units**	**English units**
Standard materials				
Body and nut	Brass		316 Stainless steel	
Seals	Viton		Viton	
Element	Brass		Brass	
Extensions	Brass		316 Stainless steel	
Maximum pressure on temperature element	55.1 bar	800 psi	55.1 bar	800 psi
Maximum pressure at IN port	8.6 bar	125 psi	8.6 bar	125 psi
Maximum net weight	0.57 kg	1 ¼ lbs	0.57 kg	1 ¼ lbs
Maximum net weight of well	0.45 kg	1 lb	0.45 kg	1 lb
Accreditations available	PED	Suitable for Group 1 & 2 liquids & gases (Ensure materials are compatible)		
	ATEX	Ex II 2G TX X		
	CE	2230C/4430B Complies with all relevant EU directives		

Dimensions

Dimensions - inches [mm].

Refer to the temperature element characteristics table on page 4 for dimensions L, M and N.

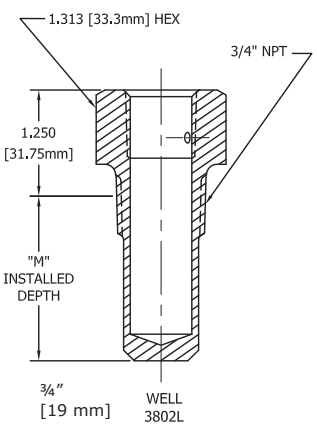

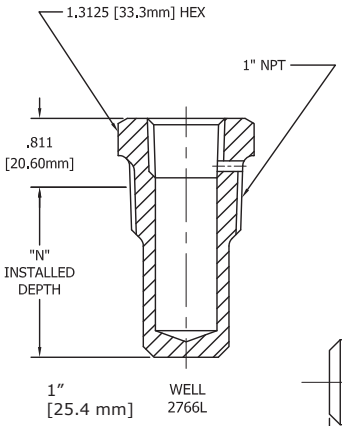

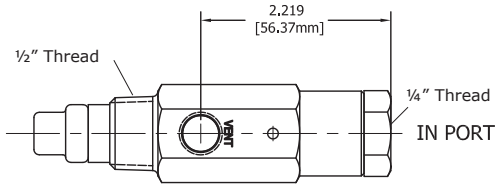

Temperature Valve without extension

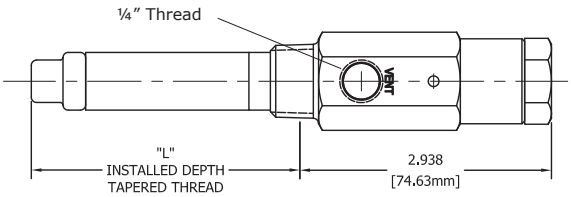

Temperature Valve with extension

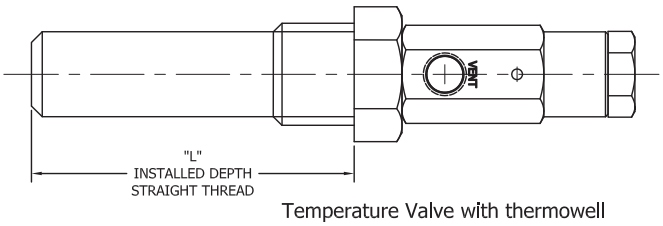

Temperature Valve with thermowell

Maintenance

AMOT Model 2230/4430 Temperature Sensing Valves can be checked by allowing the fluid temperature to rise to the indicated tripping point where it should trip the primary control. The valve may also be tested in a highly agitated, accurately calibrated, temperature bath of water or water and glycol while still connected to the pressure control system.

DO NOT use oil for calibrating temperature devices.

AMOT recommends checking any safety control system every FEW months to ensure optimum valve performance.

There are no user serviceable components in the 2230/4430 Temperature Sensing Valves.

Contact

Americas

AMOT USA
8824 Fallbrook Dr.
Houston, TX 77064
USA

Tel: +1 (281) 940 1800
Fax: +1 (713) 559 9419
Email: customer.service@amot.com

Europe, Middle East and Africa

AMOT UK
Western Way
Bury St. Edmunds
Suffolk, IP33 3SZ
England

Tel: +44 1284 715739
Fax: +44 1284 760256
Email: info@amot.com

AMOT Germany
Rondenbarg 25
22525 Hamburg
Germany

Tel: +49 40 8537 1298
Fax: +49 40 8537 1331
Email: germany@amot.com

Asia Pacific

AMOT Shanghai
Bd. 7A, No. 568, Longpan Rd., Malu Jiading
Shanghai 201801
China

Tel: +86 21 5910 4052
Fax: +86 21 5237 8560
Email: shanghai@amot.com

WARNING
This product can expose you to chemicals including Lead, which is known to the state of California to cause cancer and birth defects or other reproductive harm. For more information go to www.P65Warnings.ca.gov.

www.amot.com